Summary in Graph

Exam Summary (GO Classes GATE CS | Computer Networks | Weekly Quiz 5)

Qs. Attempted:	0 (0 + 0)
Correct Attempts:	0 (0 + 0)
Incorrect Attempts:	0 (0 + 0)
Correct Marks:	0 (0 + 0)
Penalty Marks:	0 (0 + 0)
Resultant Marks:	0 (0 + 0)

Total Questions:	15 (10 + 5)
Total Marks:	20 (10 + 10)
Exam Duration:	45 Minutes
Time Taken:	0 Minutes

Individual Question Statistics

Select Metric: Marks Obtained

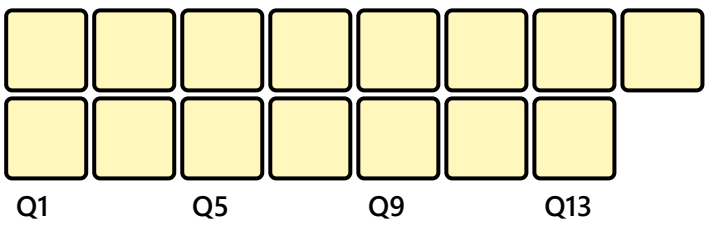

* Average Stats based on first-attempt stats of Top 10% (21) out of 206 users

EXAM RESPONSE EXAM STATS FEEDBACK

Technical

Q #1 Multiple Choice Type Award: 1 Penalty: 0.33 Computer Networks

What happens when a source sends an IP packet larger than the MTU of a router along the path and the DF (Don't Fragment) bit is set?

A. The packet is silently dropped

B. The packet is fragmented by the router

C. The destination host discards the packet

D. An ICMP error message is sent back to the source

Your Answer: | Correct Answer: D | Not Attempted | Time taken: 00min 00sec | Discuss

Q #2 | Multiple Choice Type | Award: 1 | Penalty: 0.33 | Computer Networks

An IP datagram of total length 1000 bytes, including a 20-byte IP header, needs to be transmitted over a network with a Maximum Transmission Unit (MTU) of 512 bytes. The datagram is fragmented accordingly. Fragmentation must ensure that each fragment's payload size (excluding header) is a multiple of 8 bytes, except possibly the last fragment.

What is the Fragment Offset value (in bytes) for the third fragment?

A. 976

B. 122

C. 508

D. 492

Your Answer: | Correct Answer: A | Not Attempted | Time taken: 00min 00sec | Discuss

Q #3 | Multiple Choice Type | Award: 1 | Penalty: 0.33 | Computer Networks

An IP datagram arrives at a router with the following header information:

Length of IP header:	20 bytes
Total length of IP datagram:	996 bytes
DF flag:	0
MF flag:	1
Fragment offset:	122

The datagram must now be forwarded over a network with an MTU of only 500 bytes.
Use the information in the IP header to infer the minimum total length of the original datagram (before it was fragmented for the first time).

A. 1500 bytes

B. 1972 bytes

C. 1496 bytes

D. 1118 bytes

Your Answer: | Correct Answer: B | Not Attempted | Time taken: 00min 00sec | Discuss

Q #4 | Multiple Choice Type | Award: 1 | Penalty: 0.33 | Computer Networks

Match the following IP header fields (Column B) to their respective functions (Column A). Use option $\mathbf{f)}$ if none of the given fields apply.

Column A (Purpose)	Column B (Field)
i. Used for fragmentation	a) 16-bit Identification Field
ii. Indicates presence of options	b) 4-bit Header Length
iii. Prevents infinite packet looping	c) 8-bit TTL
iv. Detects corruption of packet payload	d) 16-bit Checksum
	e) 8-bit Protocol
	f) none-of-the-above

A. $\mathrm{i} \rightarrow \mathrm{a}, \mathrm{ii} \rightarrow \mathrm{b}, \mathrm{iii} \rightarrow \mathrm{c}, \mathrm{iv} \rightarrow \mathrm{d}$

B. $\mathrm{i} \rightarrow \mathrm{a}, \mathrm{ii} \rightarrow \mathrm{b}, \mathrm{iii} \rightarrow \mathrm{c}, \mathrm{iv} \rightarrow \mathrm{f}$

C. $\mathrm{i} \rightarrow \mathrm{c}, \mathrm{ii} \rightarrow \mathrm{a}, \mathrm{iii} \rightarrow \mathrm{e}, \mathrm{iv} \rightarrow \mathrm{d}$

D. $\mathrm{i} \rightarrow \mathrm{e}, \mathrm{ii} \rightarrow \mathrm{b}, \mathrm{iii} \rightarrow \mathrm{a}, \mathrm{iv} \rightarrow \mathrm{f}$

Your Answer: | Correct Answer: B | Not Attempted | Time taken: 00min 00sec | Discuss

Q #5 | Multiple Select Type | Award: 1 | Penalty: 0 | Computer Networks

A router receives a 1500-byte IPv4 packet (including a 20-byte IP header), with IP Identification field set to $\mathbf{x}$, the MF (More Fragments) flag set to 1, and the DF (Don't Fragment) flag set to 0. The router needs to forward the packet over a link with an MTU of 1000 bytes, so fragmentation is required.

Which of the following statements about the IP header fields of the second fragment are correct?

A. The value of the Identification field in the second fragment is $\mathbf{x}$

B. The Total Length field in the second fragment is $\mathbf{520}$ bytes

C. The Fragment Offset field in the second fragment is $\mathbf{980}$

D. The MF (More Fragments) flag in the second fragment is $\mathbf{1}$

Your Answer: | Correct Answer: A;B;D | Not Attempted | Time taken: 00min 00sec | Discuss

Q #6 | Multiple Choice Type | Award: 1 | Penalty: 0.33 | Computer Networks

Host A sends a total of 2400 bytes to Host B over a network path as shown below.

This includes a 20-byte TCP header and a 20-byte IP header.

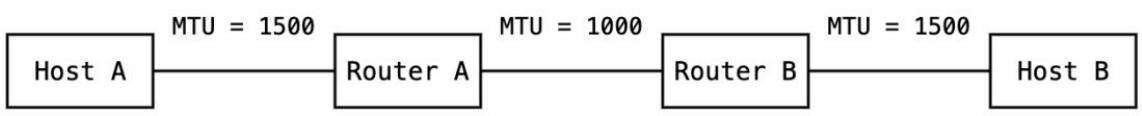

Assume the probability that any fragment arrives intact over any link is p, and there is no retransmission.

What is the probability that the entire 2400 bytes arrive at Host B without the need for retransmission?

A. p^6

B. p^7

C. p^8

D. p^9

Your Answer: | Correct Answer: C | Not Attempted | Time taken: 00min 00sec | Discuss

Q #7 | Multiple Select Type | Award: 1 | Penalty: 0 | Computer Networks

During normal IP packet forwarding by a router, which of the following packet fields are updated?

A. IP header Source address

B. IP header Destination address

C. IP header TTL

D. IP header checksum

Your Answer: | Correct Answer: C;D | Not Attempted | Time taken: 00min 00sec | Discuss

Q #8 | Multiple Choice Type | Award: 1 | Penalty: 0.33 | Computer Networks

An IP router uses longest prefix matching and has the following forwarding table:

Prefix	Interface
128.2.0.0/24	Interface 1
128.2.1.0/24	Interface 2
128.2.2.0/24	Interface 2
128.2.3.0/24	Interface 3

The router can only store 3 prefix entries.
Which of the following options gives a functionally equivalent forwarding table?

A.

Prefix	Interface
128.2.0.0/24	Interface 1
128.2.1.0/23	Interface 2
128.2.3.0/24	Interface 3

B.

Prefix	Interface
128.2.0.0/24	Interface 1
128.2.1.0/24	Interface 2
128.2.2.0/24	Interface 2

C.

Prefix	Interface
128.2.0.0/22	Interface 2
128.2.0.0/24	Interface 1
128.2.3.0/24	Interface 3

D.

Prefix	Interface
128.2.0.0/22	Interface 1
128.2.1.0/24	Interface 2
128.2.3.0/24	Interface 3

Your Answer: | Correct Answer: C | Not Attempted | Time taken: 00min 00sec | Discuss

Q #9 | Multiple Choice Type | Award: 1 | Penalty: 0.33 | Computer Networks

Consider the following topology, where a node labelled with $\mathbf{N}$ denotes an end system, $\mathbf{H}$ denotes a hub, $\mathbf{S}$ denotes a switch, and $\mathbf{R}$ denotes a router:

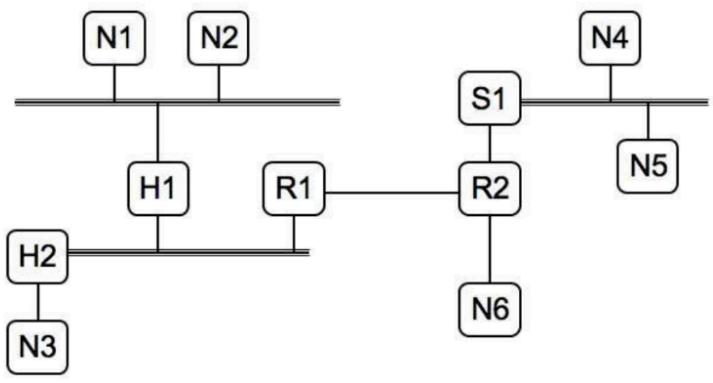

All links are Ethernet.

In an Ethernet-based network, suppose node $N1$ constructs a packet and accidentally flips a single bit in the IP header before constructing the Ethernet frame; i.e., Ethernet CRC is calculated after the bit flip. Where in the network will this error be detected and the packet dropped?

A. At the hub $H1$, due to Ethernet CRC failure.

B. At the router $R1$, due to invalid IP header checksum.

C. At the router $R2$, due to invalid IP header checksum.

D. At the switch $S1$, due to Ethernet CRC failure.

Your Answer: | Correct Answer: B | Not Attempted | Time taken: 00min 00sec | Discuss

Q #10 | Multiple Choice Type | Award: 1 | Penalty: 0.33 | Computer Networks

Suppose computers A and B have IP addresses $10.105.1.113$ and $10.105.1.91$, respectively, and they both use the same netmask N. Which of the values of N given below should not be used if A and B should belong to the same network?

A. $255.255.255.0$

B. $255.255.255.128$

C. $255.255.255.192$

D. $255.255.255.224$

Your Answer: | Correct Answer: D | Not Attempted | Time taken: 00min 00sec | Discuss

Q #11 | Multiple Choice Type | Award: 2 | Penalty: 0.67 | Computer Networks

An IP datagram is fragmented into three packets.

The following table shows the first 20 bytes of each IP fragment, starting from the IP header (hex values):

📦 Packet #1	📦 Packet #2	📦 Packet #3
45 00 02 54	45 00 01 5a	45 00 02 54
42 d8 20 48	42 d8 00 90	42 d8 20 00
40 11 fe af	40 11 1f 62	40 11 fe f7
0a 00 01 02	0a 00 01 02	0a 00 01 02
0a 00 01 c8	0a 00 01 c8	0a 00 01 c8

Based on this information, what is the correct order of the fragments for reassembling the original IP datagram?

A. Packet #1 → Packet #3 → Packet #2

B. Packet #3 → Packet #1 → Packet #2

C. Packet #2 → Packet #3 → Packet #1

D. Packet #3 → Packet #2 → Packet #1

Your Answer: | Correct Answer: B | Not Attempted | Time taken: 00min 00sec | Discuss

Q #12 Numerical Type | Award: 2 | Penalty: 0 | Computer Networks

A computer virus is spreading in a network of 128 computers.

- At the beginning (round 0), only 1 computer is infected.
- In each round, every infected computer spreads the virus to 2 new uninfected computers.
- The virus is smart and never tries to infect a computer that is already infected.
- All infections in a round happen at the same time. After that, the next round begins.

How many rounds (after the starting point) are needed to infect all 128 computers?

Your Answer: | Correct Answer: 5 | Not Attempted | Time taken: 00min 02sec | Discuss

Q #13 Multiple Choice Type | Award: 2 | Penalty: 0.67 | Computer Networks

A sender is transmitting 7 packets using the Go-Back-N protocol with a window size of 3, an RTT of 200 ms, and a retransmission timeout of 500 ms. If ONLY the $5th$ packet is lost, how long does it take for all packets to be correctly received and acknowledged?

A. 600 ms

B. 700 ms

C. 900 ms

D. 1000 ms

Your Answer: | Correct Answer: C | Not Attempted | Time taken: 00min 00sec | Discuss

Q #14 Multiple Choice Type | Award: 2 | Penalty: 0.67 | Computer Networks

We can think of the network as a tree, with the video server at the root and the one million subscribers $\left(10^6\right)$ at the leaves. Assuming that the tree has degree four (i.e., each router in the tree connects to four routers closer to the leaves), then roughly how many routers does a packet pass through from the root to each subscriber?

A. 2

B. 15

C. 10

D. 20

Your Answer: | Correct Answer: C | Not Attempted | Time taken: 00min 00sec | Discuss

Q #15 Multiple Choice Type | Award: 2 | Penalty: 0.67 | Computer Networks

Consider the following IP header. The checksum field is currently set to `0000`. The header is being prepared for transmission.

Version **4**	IHL **5**	Type of Service **00**	Total Length **001C**
Identification **0001**		Flags **0**	Fragment Offset **0000**
Time to Live **01**	Protocol **11**	Header Checksum **0000**	
Source Address **0A0C0E05**			
Destination Address **0C060709**			

What value should be written into the checksum field?

A. 744E

B. 8BB1

C. FFFF

D. 110E

Your Answer: **Correct Answer: B** **Not Attempted** **Time taken: 00min 00sec** **Discuss**

Copyright & Stuff